Gray, Res. Lib.
5/17/49 - Gift

PATENT OFFICE
JUL 15 1949
DESIGN DIVISION

LIBRARY
MAY 23 1949
U.S. PATENT OFFICE

RETURN TO
DESIGN DIV.

Truscon Steel Co.

TRUSCON PRESSED STEEL *Inserts*

TRUSCON PRESSED STEEL INSERTS

The problem of attaching shafting, hangers, sprinkler systems, heating systems, etc., to concrete has been solved in a practical and economical way with steel inserts, a useful and efficient product.

It is poor economy to provide attachments in the concrete after the completion of the building and very expensive to drill into the concrete for these attachments. Besides wasting time and labor, it delays occupancy of the building. All this can be eliminated by placing the inserts at the time of pouring the concrete. By providing a sufficient number of inserts, not only is the correct placing of the fixtures assured but changes in location can be readily made at any time.

INSERTS ARE USED FOR:

Anchoring—

machinery, monorail systems, shafting and trolley tracks in industrial buildings.
seat standards in concrete stadiums.
floor screeds and railings of all kinds.

Fastening—

motors, blowers, transformers, etc., to ceilings, walls and columns.
electric cables to ceilings and walls or in tunnels and subways, especially in inspection tunnels for reservoirs, where it is extremely important that the concrete work be not subjected to any operations which might tend to weaken it as is the case when the concrete is chipped or drilled in order to insert expansion shields.
counter-balance rails and guides in elevator shafts.
wood or steel super-structures to concrete structures, such as piers, bridges, boardwalks.
gymnastic equipment in schools and gyms.
rails along car pits in car barns.

Suspending—

lighting fixtures from ceilings, walls or columns.
pipe galleries from ceilings in refrigerating plants.

Carrying—

auxiliary framing which supports the various cables, wires and other instruments in telephone exchange buildings.
sprinkler systems.
face angles on spandrels and girders to support the brick veneer on concrete skeleton buildings.

CARRYING CAPACITIES

Since the supporting capacity of inserts is largely dependent on the strength of the concrete, we cannot guarantee any particular loading. The following loads have been determined by tests and give a factor of safety of at least four.

Inserts	For average good concrete	For very good concrete
Slotted Inserts	2000 lbs. per lin. ft.	3000 lbs. per lin. ft.
Adjustable Inserts		
½"	800 lbs. per insert	1400 lbs. per insert
⅝" and ¾"	1300 lbs. per insert	2400 lbs. per insert
Tapped Inserts		
All sizes	1500 lbs. per insert	2600 lbs. per insert

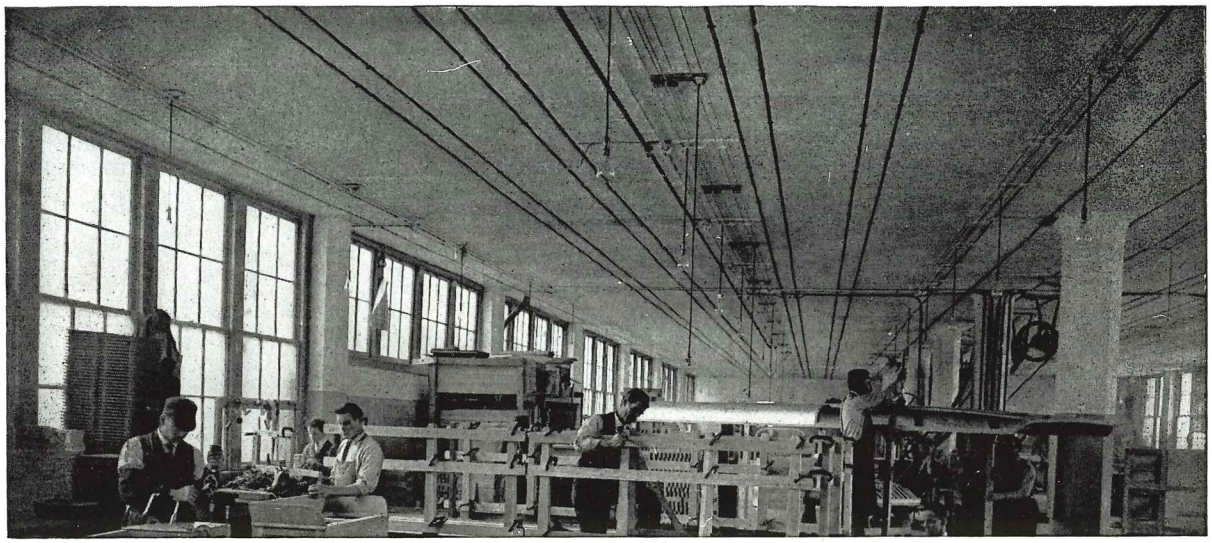

Slotted Inserts butted end to end, to form a continuous slot

PATENT OFFICE
JUL 15 1949
DESIGN DIVISION
RETURN TO
DESIGN DIV.

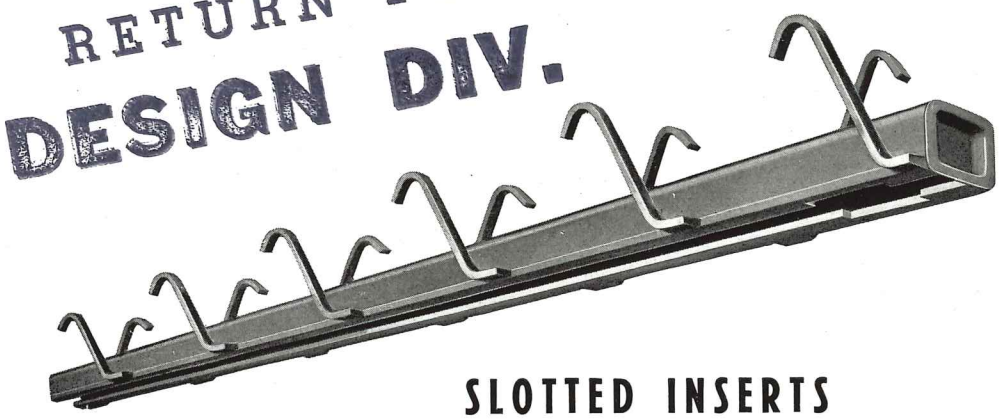

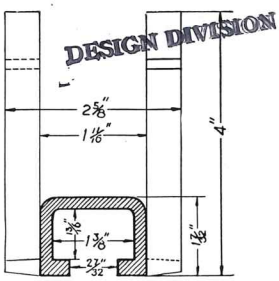

SLOTTED INSERTS

Truscon Slotted Inserts are attached to the forms and are completely imbedded in the concrete construction. Only the narrow slot flush with the concrete is seen in the completed work. The bolt can be moved along this slot to any location, allowing wide variation in position. They are used in ceilings, floors, walls, slabs, beams or columns.

The improved design of the Truscon Slotted Insert gives it extraordinary strength. The inserts are made from a special rolled steel section of substantial thickness. The inner flanges which support the bolt heads are made extra thick so that they cannot be bent out or sheared off. The anchors are integral with the insert and occur every 6″ on each side. Being a part of the bearing flanges, they transfer the load on the insert directly into the concrete.

The shallowness of the insert permits the reinforcing steel in the concrete to pass over it without reducing the strength of the construction.

Inserts are adapted for 1/2″, 5/8″ or 3/4″ bolts. Where 1/2″ or 5/8″ bolts are used, special washers are furnished to prevent bolt from turning after being inserted in the slot. Standard lengths: 12″, 18″, 24″, 36″, 48″ and 60″. A continuous insert of any desired length is obtained by removing end caps and butting inserts end to end.

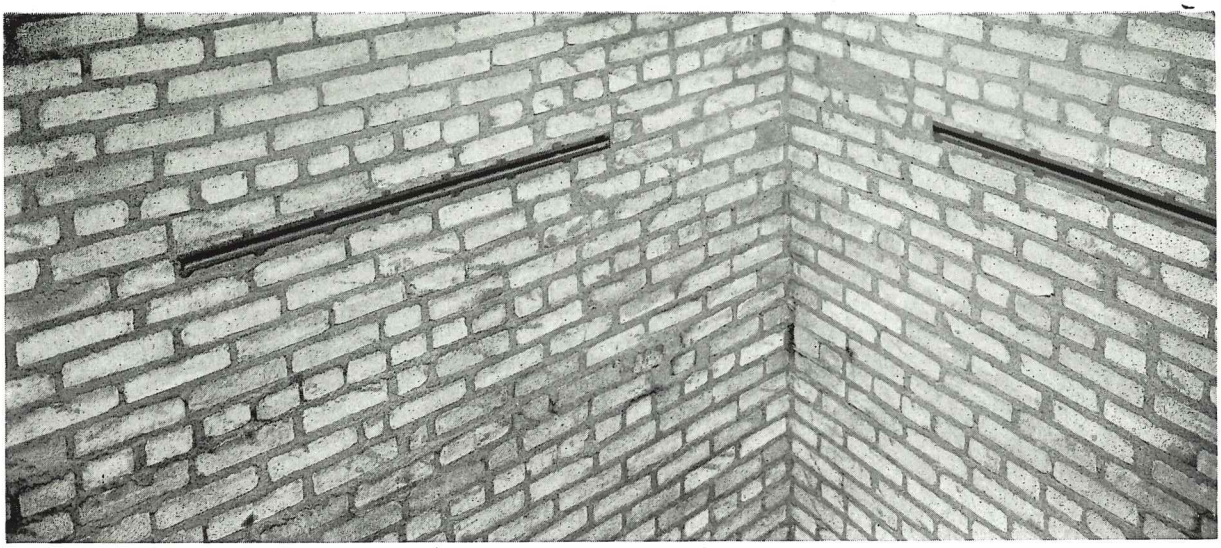

Brick Inserts installed in elevator shaft.

BRICK INSERTS

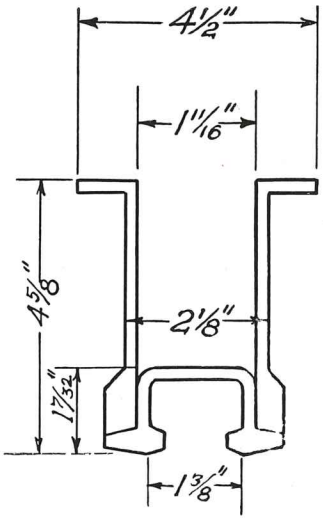

Truscon Brick Slotted Inserts have all the qualities and properties of Truscon Concrete Slotted Inserts.

The prongs are so bent that they provide a positive anchorage of the insert to the masonry.

Standard lengths 24″, 36″, 48″ and 60″. Any desired length or run is obtained by removing end caps and butting open ends together.

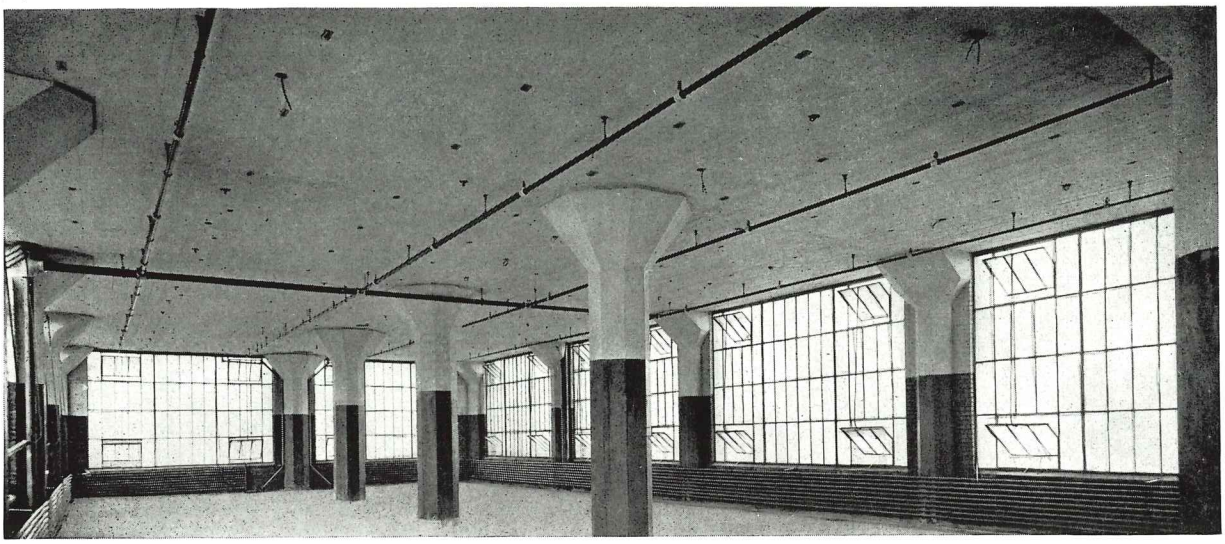

Adjustable Inserts used to carry pipes.

PATENT OFFICE
JUL 15 1949
DESIGN DIVISION

ADJUSTABLE INSERTS

Truscon Adjustable Inserts are manufactured from the highest grade of open hearth steel. The arms are so formed that when concrete is poured the insert is thoroughly imbedded at all points, making loosening or tearing out impossible. This insert provides great strength and stability, has a good range for adjusting and gives a neat finished appearance. Easy to install and does not interfere with the placing of reinforcing steel. Made in three sizes to carry 1/2", 5/8" and 3/4" bolts. 3/8" bolts can be used in the 1/2" size by the addition of special washers furnished for that purpose.

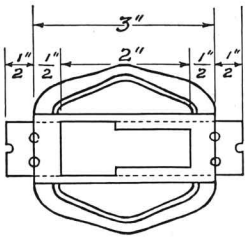

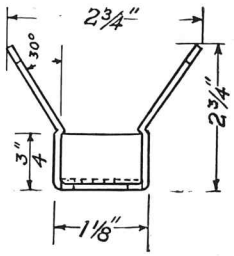

For 1/2" Bolts.

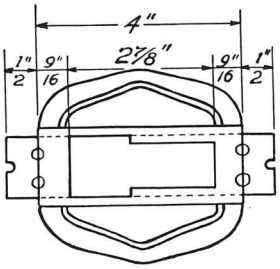

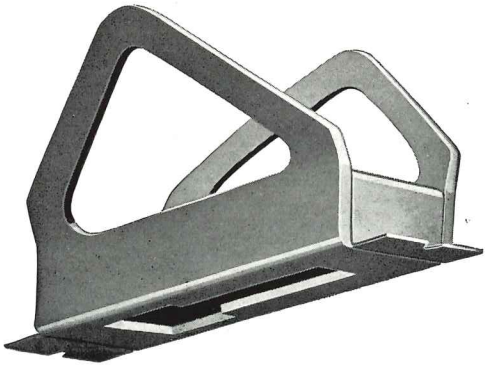

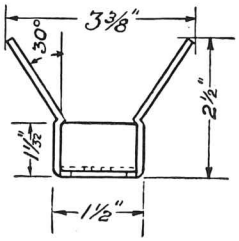

For 5/8" and 3/4" Bolts.

Tapped Inserts used to carry conduits and pipes.

PATENT OFFICE
JUL 15 1949
DESIGN DIVISION

TAPPED INSERTS

Truscon Tapped Inserts are made from pressed steel of the highest quality. Where exact location of attachments can be determined before start of construction this insert is particularly adapted.

A good method for attaching supports for fixtures—brackets, sprinkling system, etc. Truscon Tapped Inserts are furnished tapped for ½″, ⅝″ and ¾″ bolts.

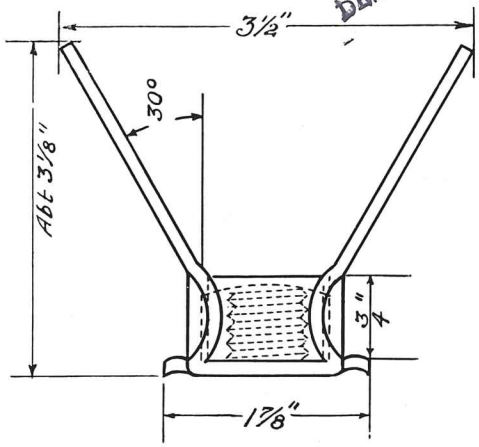

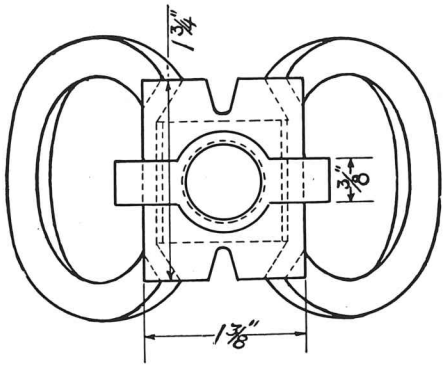

PRODUCTS MANUFACTURED BY TRUSCON

STEEL WINDOW PRODUCTS

Double-Hung Windows
Donovan Awning Type
Pivoted Windows
Utility Windows
Maxim-Air Louver Windows
Continuous Windows
Detention Windows
Intermediate Windows
Commercial Projected
Architectural Projected
Steel Casements
Screens and Storm Sash
Basement Windows
Mechanical Operators
Formed Steel Lintels
Formed Steel Surrounds

PATENT OFFICE
JUL 15 1949
DESIGN DIVISION

STEEL DOORS

Swing and Slide
Bifold
Canopy
Crane
Turnover
Accordion
Vertical Lift
Vertical Lift Canopy
Straight Slide
Braced and Unbraced Canopy

FLOOR SYSTEMS

Unigrid Floors
Channelplate Construction
Plategrid Gratings
Floorgrid Reinforcing

STEELDECK ROOFS (Insulated)

Ferrobord

STEEL JOISTS

Open Truss Joists
Plate Girder Joists
Nailer Joists
Clerespan Joists
Accessories

RAILROAD CROSSINGS

Weltrus Crossings

METAL LATH PRODUCTS

Herringbone Doublemesh
Diamond Laths
Ribplex Lath
Self-Sentering
Trussit
Stucco Steel and Strip-ite
Corner Beads and Cornerite
Casings
Cold Rolled Channels
Hollow Partition Studs
Metal Trim

REINFORCING STEEL

Concrete Bars
Column Hooping
Floretyle Construction
Locktyle Construction
Bank Vault Reinforcing
Pressed Steel Inserts

ROAD REINFORCING

Welded Steel Fabric
Contraction Plates
Curb Bars
Steel Guard Rails

STEEL FACED INSULATION

Ferroclad Panels

STEEL POLES

Weltrus Type
H-Frames
Floodlight Towers
Pipe Line Supports
Radio Towers
Sub-Stations

PRESSED AND DRAWN STEEL

Refrigerator Stampings
Axle Housings
Washing Machine Tubs
Automotive Frame Parts
Steel Platforms
Steel Boxes
Foundry Flasks
Brake Shoe Backs
Tunnel Liner Plates
Pressed Steel Stampings from 20 gauge on refrigerator stampings to the heavier gauges used on automotive part stampings.

TRUSCON SALES AND ENGINEERING OFFICES

ALBANY 7, N. Y., 75 State Street
ATLANTA 3, GA., 610 Rhodes-Haverty Building
BALTIMORE 11, MD., 330 W. 24th Street
BIRMINGHAM 3, ALA., 229 American Life Building
BOSTON 27 (South), MASS., 307 Dorchester Avenue
BUFFALO 3, N. Y., 1426 Rand Building
CHARLESTON, W. VA., 612 Atlas Building
CHATTANOOGA 1, TENN., 19th and Grove Streets
CHICAGO 6, ILL., 201 No. Wells Street
CINCINNATI 2, OHIO, 330 Dixie Terminal Building
CLEVELAND 15, OHIO, 735 Hanna Building Annex
COLUMBUS 15, OHIO, 818-821 Atlas Building
DALLAS 1, TEXAS, 314 Construction Building
DAYTON 2, OHIO, 44 So. Ludlow Street
DENVER 2, COLO., 228 Patterson Building
DETROIT 26, MICH., 615 Wayne Street
ERIE, PA., 215 Hayes Building
GREENSBORO, N. C., Jefferson Standard Building
HARRISBURG, PA., 410 N. Second Street
HOUSTON 11, TEXAS, 501 N. Greenwood Street
INDIANAPOLIS 3, IND., 398 Division Street
JACKSONVILLE 2, FLA., 301 Hildebrandt Building
KANSAS CITY 6, MO., 1012 Baltimore Avenue
LITTLE ROCK, ARK., 812-13 Union Life Building
LOS ANGELES 54, CALIF., P. O. Box 3699, Terminal Annex Station
LOUISVILLE 1, KY., 1032 So. Eighth Street
MEMPHIS 5, TENN., 269 Walnut Street
MINNEAPOLIS 2, MINN., 246 Baker Building
NEW ORLEANS 12, LA., 1143 Canal Bank Building
NEW YORK 17, N. Y., 155 E. 44th Street
NORFOLK 10, VA., 518 Dickson Building
OKLAHOMA CITY 2, OKLA., 610 1/2 Colcord Drive
OMAHA 2, NEB., 806-07 Insurance Building
PHILADELPHIA 3, PA., 1616 Walnut Street
PHOENIX, ARIZ., 303 Luhrs Building
PITTSBURGH 22, PA., 2541 Oliver Building
PORTLAND 12, ORE., 2139 N. Kerby Avenue
POTTSVILLE, PA., 1541 Howard Avenue
RICHMOND, VA., 122 N. 8th Street
ST. LOUIS 3, MO., 8th Floor, Shell Building
SALT LAKE CITY 10, UTAH, 1526 So. West Temple Street
SAN FRANCISCO 5, CALIF., 604 Mission Street
SEATTLE 4, WASH., 757 Central Building
SYRACUSE 2, N. Y., 303 Syracuse-Kemper Insurance Building
TOLEDO 4, OHIO, 220 Richardson Building
WASHINGTON 5, D. C., 700 Investment Building
YOUNGSTOWN 1, OHIO, 1315 Albert Street

PATENT OFFICE
JUL 15 1949
DESIGN DIVISION

PRESSED STEEL DIVISION: 6100 TRUSCON AVENUE, CLEVELAND 4, OHIO
EXPORT DEPARTMENT: CHRYSLER BUILDING, 405 LEXINGTON AVENUE, NEW YORK 17, N. Y.
FACTORIES IN CLEVELAND, OHIO; CANTON, OHIO; GADSDEN, ALABAMA; WALKERVILLE, ONT., CANADA

RETURN TO DESIGN DIV.

TRUSCON WAREHOUSES

BOSTON, MASS.
BUFFALO, N. Y.
CHATTANOOGA, TENN.
CHICAGO, ILL.
CINCINNATI, OHIO
CLEVELAND, OHIO
DENVER, COLO.
DETROIT, MICH.
GADSDEN, ALA.
HARRISON, N. J.
HOUSTON, TEXAS
INDIANAPOLIS, IND.
JACKSONVILLE, FLA.
KANSAS CITY, MO.
LONG ISLAND CITY, N.Y.
LOS ANGELES, CALIF.
PHILADELPHIA, PA.
PITTSBURGH, PA.
PORTLAND, OREGON
SAN FRANCISCO, CALIF.
ST. LOUIS, MO.
YOUNGSTOWN, OHIO

MAIN OFFICE AND PLANT

TRUSCON STEEL COMPANY, YOUNGSTOWN 1, OHIO

SUBSIDIARY OF REPUBLIC STEEL CORPORATION

No. G-50—2500 1-48

Printed in U. S. A.